PCB Load & Torque (A Division of PCB Piezotronics, Inc.) claims proprietary rights in the information disclosed hereon. Neither it nor any reproduction thereof will be disclosed to others without the written consent of PCB Load and Torque.

61662

REVISIONS		
REV	DESCRIPTION	ECO
C	ADDED FASTENER CLAMP VIEW - 05.03.22, PTE	52760

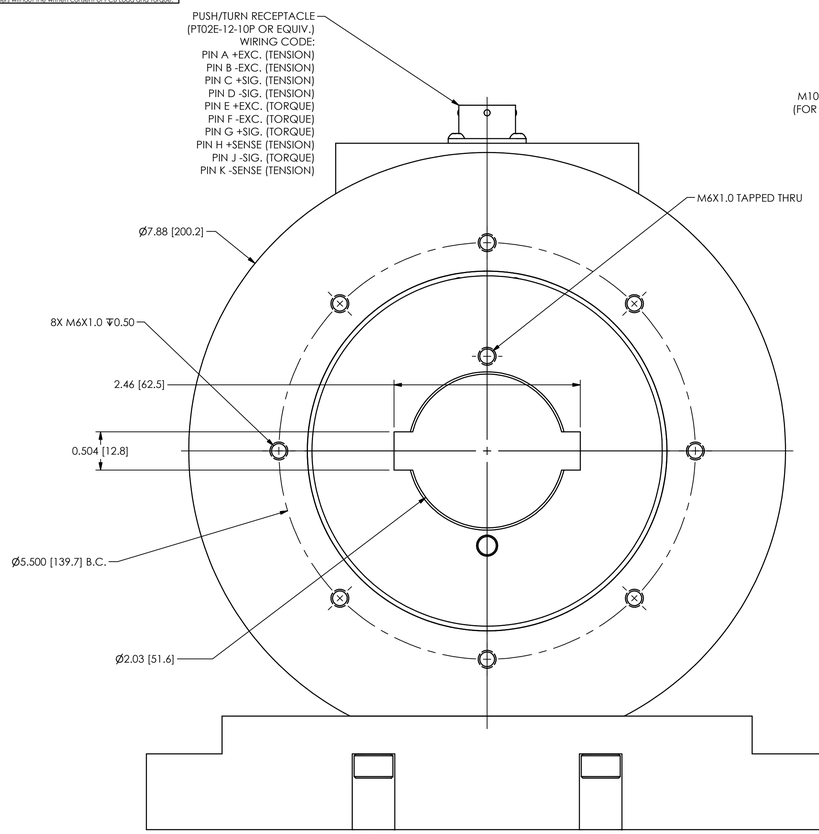

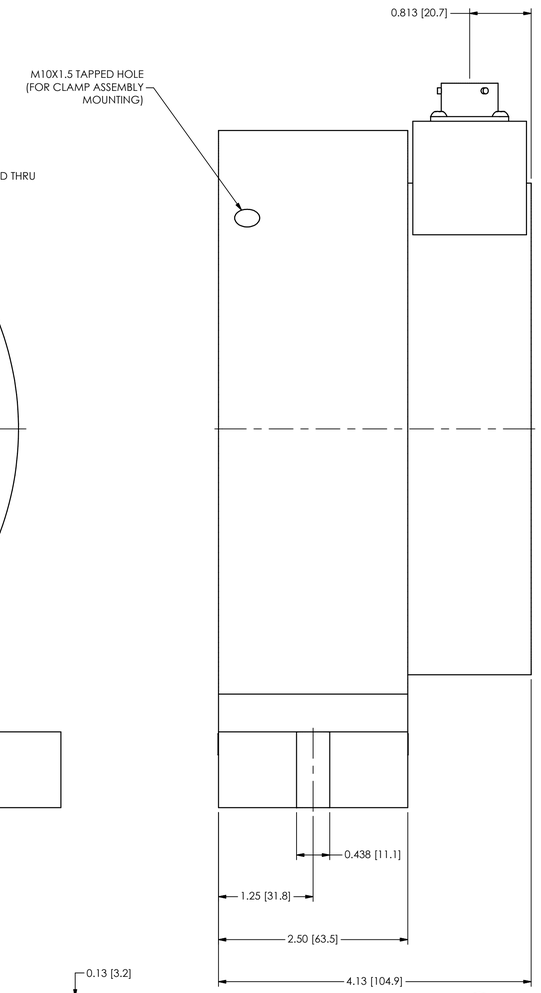

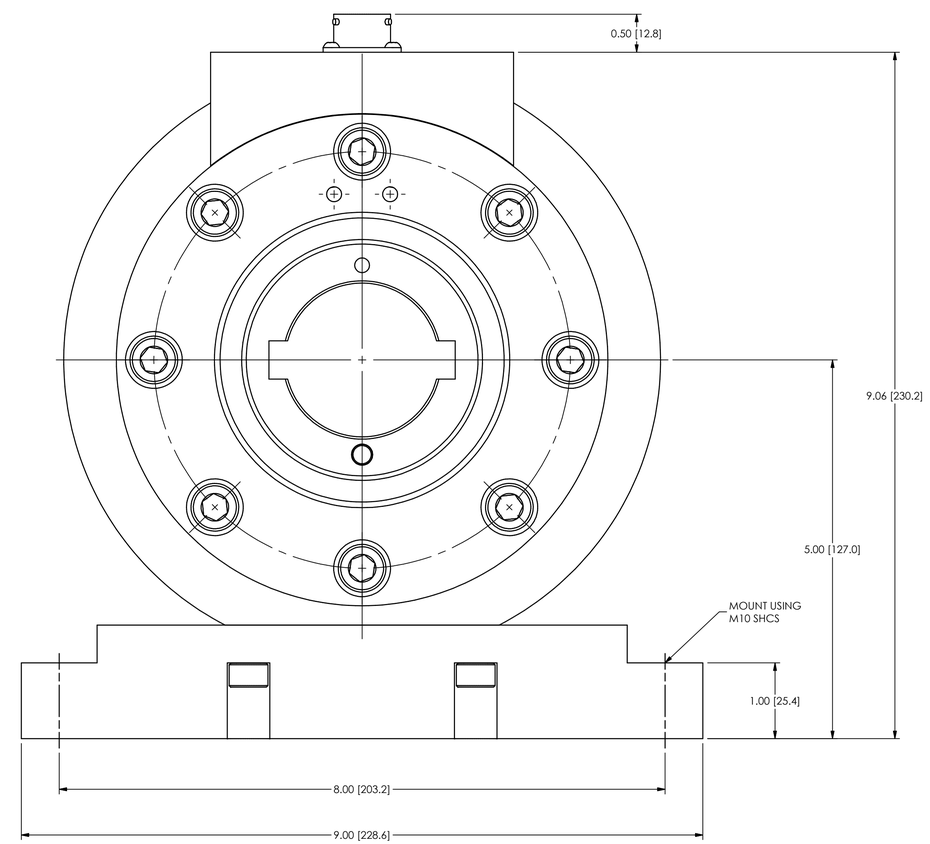

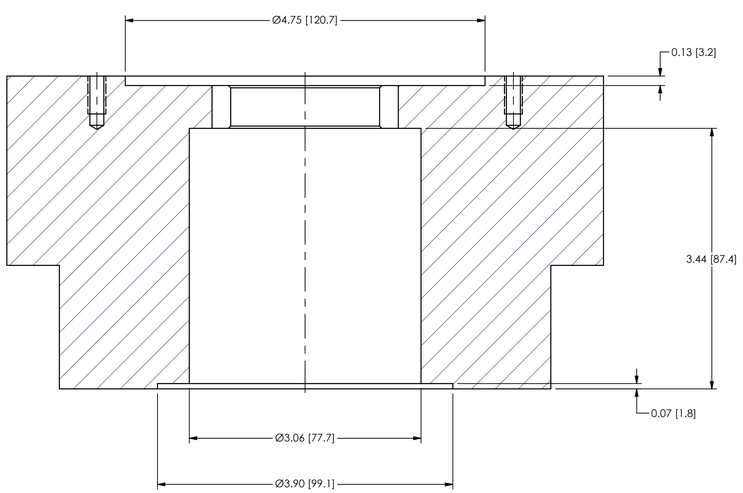

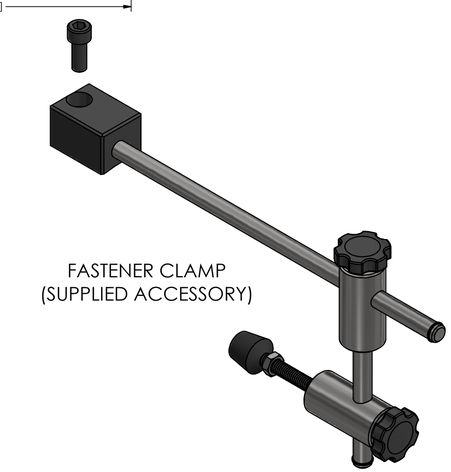

FASTENER CLAMP
(SUPPLIED ACCESSORY)

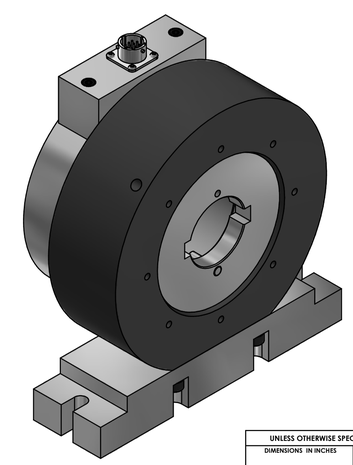

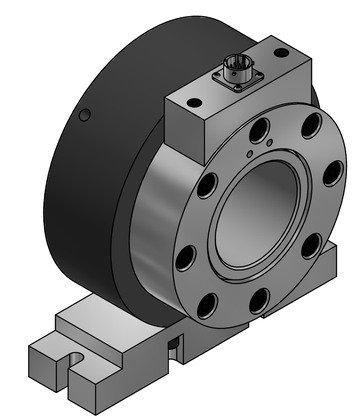

UNLESS OTHERWISE SPECIFIED TOLERANCES ARE:		DRAWN		CHECKED		ENGINEER		PCB LOAD & TORQUE A PCB GROUP COMPANY
DIMENSIONS IN INCHES DECIMALS XX ±.01 XXX ±.005 ANGLES ± .5 DEGREES	DIMENSIONS IN MILLIMETERS [IN BRACKETS] DECIMALS X ±0.3 XX ±0.13 ANGLES ± .5 DEGREES	JSD	05.18.15	PTE	05.02.17	JSD	05.18.15	24350 Indoplex Circle, Farmington Hills,MI 48335 (248) 888-8260 E-MAIL: lfinfo@pcb.com
FILLETS AND RADII .015 MAX	FILLETS AND RADII 0.38 MAX	TITLE OUTLINE DRAWING FASTENER RESEARCH HEAD 9400, 9500, 9600 SERIES						DWG. NO. 61662
								SCALE: FULL SHEET 1 OF 1